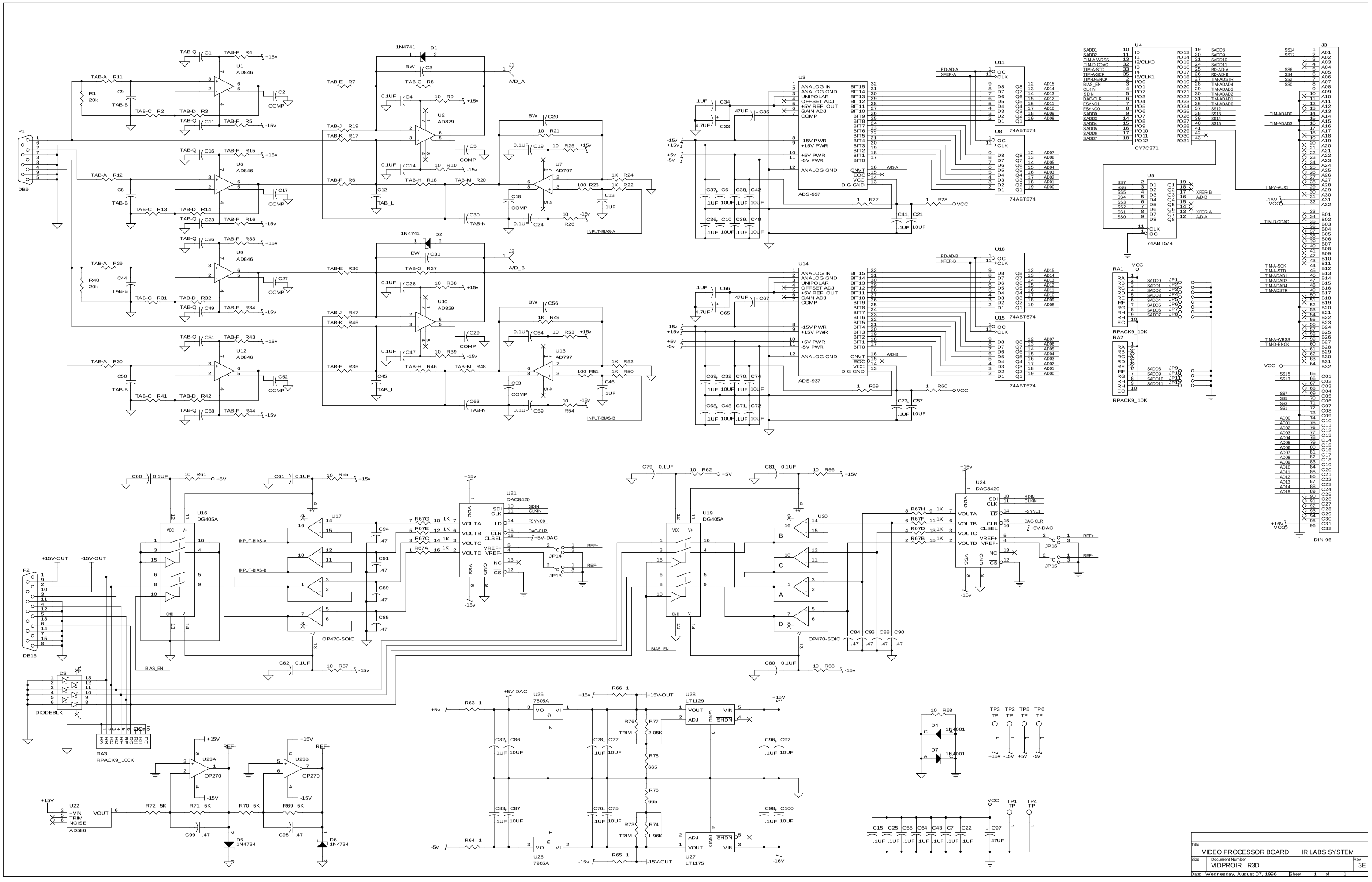

Title	VIDEO PROCESSOR BOARD IR LABS SYSTEM	
Size	Document Number VIDPROIR R3D	Rev 3E
Date: Wednesday, August 07, 1996	Sheet 1 of 1	